Norsat® International Inc.

BUC

KU-BAND 1041XRTE 4W NON-INVERTED

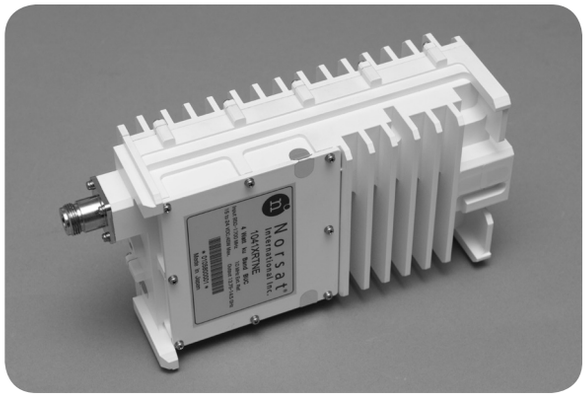

TYPICAL SPECIFICATIONS

Output frequency	13.75 to 14.50 GHz
Input frequency	950 to 1700 MHz
Output P1dB minimum	36 dBm
L.O. frequency	12.8 GHz
Input VSWR maximum	2.0 : 1
Output VSWR maximum	2.1 : 1
Phase noise (SSB) maximum	-70 dBc/Hz at 1 kHz -80 dBc/Hz at 10 kHz -90 dBc/Hz at 100 kHz
External reference signal frequency	10 MHz
Power requirements	+15 to +24V supplied through center conductor of IF cable
Power consumption maximum	45 W
Dimensions	228 (L) x 125 (W) x 65 (H) mm (9.0 x 4.9 x 2.6 in)
Weight	1.9 kg / 4.2 lb
External reference level	-5 to + 5 dBm
10 MHz external reference phase noise maximum	-135 dBc/Hz at 100 Hz -140 dBc/Hz at 1 kHz -150 dBc/Hz at 10 kHz
Gain (including variation over temperature and frequency)	50 dB min 60 dB max
Gain stability over temperature	±2.25 dB at any constant frequency
Gain stability in-band at any constant temperature	±1.0 dB in any 54 MHz band ±3.0 dB over full 750 MHz band

HOW TO ORDER KU-BAND 1041XRTE

1041XRTFE

- FREQUENCY ····· E - 13.75 - 14.50 GHz
- CONNECTOR ····· F - 75 Ohm; N - 50 Ohm
- P1dB ····· 4 - 4W
- TRANSMITTER SERIES #

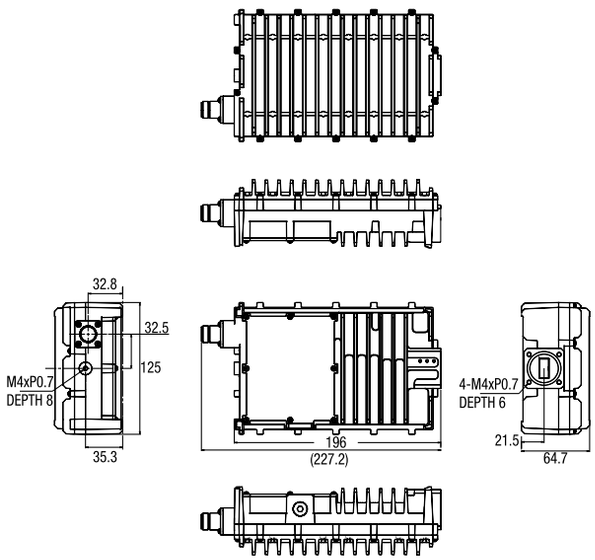

MECHANICAL DIAGRAM

Americas & Asia Pacific Tel: +1.604.292.9000 Fax: +1.604.292.9100 TOLL FREE: +1.800.644.4562

Europe, Middle East and Africa Tel: +44 1522 730800 Fax: +44 1522 730927

e-mail: sales@norsat.com www.norsat.com

Copyright (c) 2006 Norsat International Inc. All rights reserved. Specifications subject to change without notice. Version 8